DESIGN + ENGINEERING
GROHE GERMANY

99.1026.031/ÄM 245027/03.19

www.grohe.com

Pure Freude an Wasser

GROHE

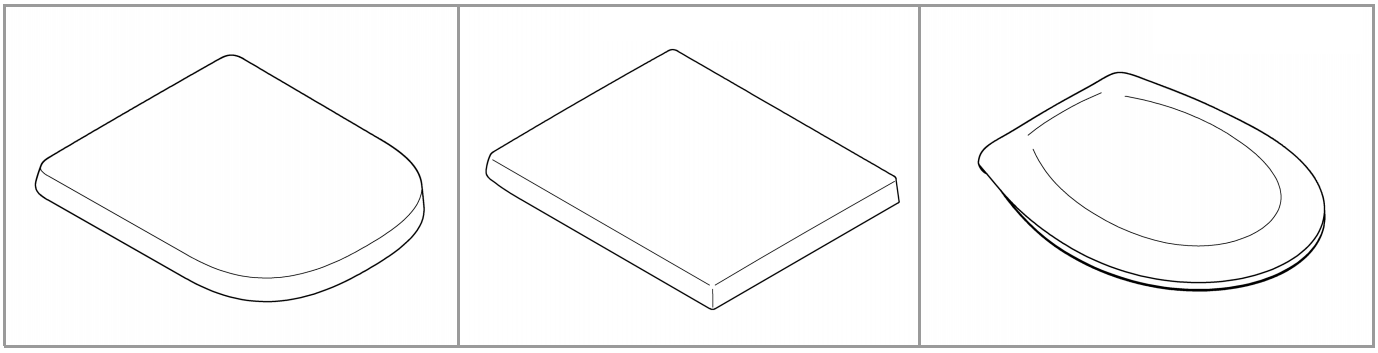

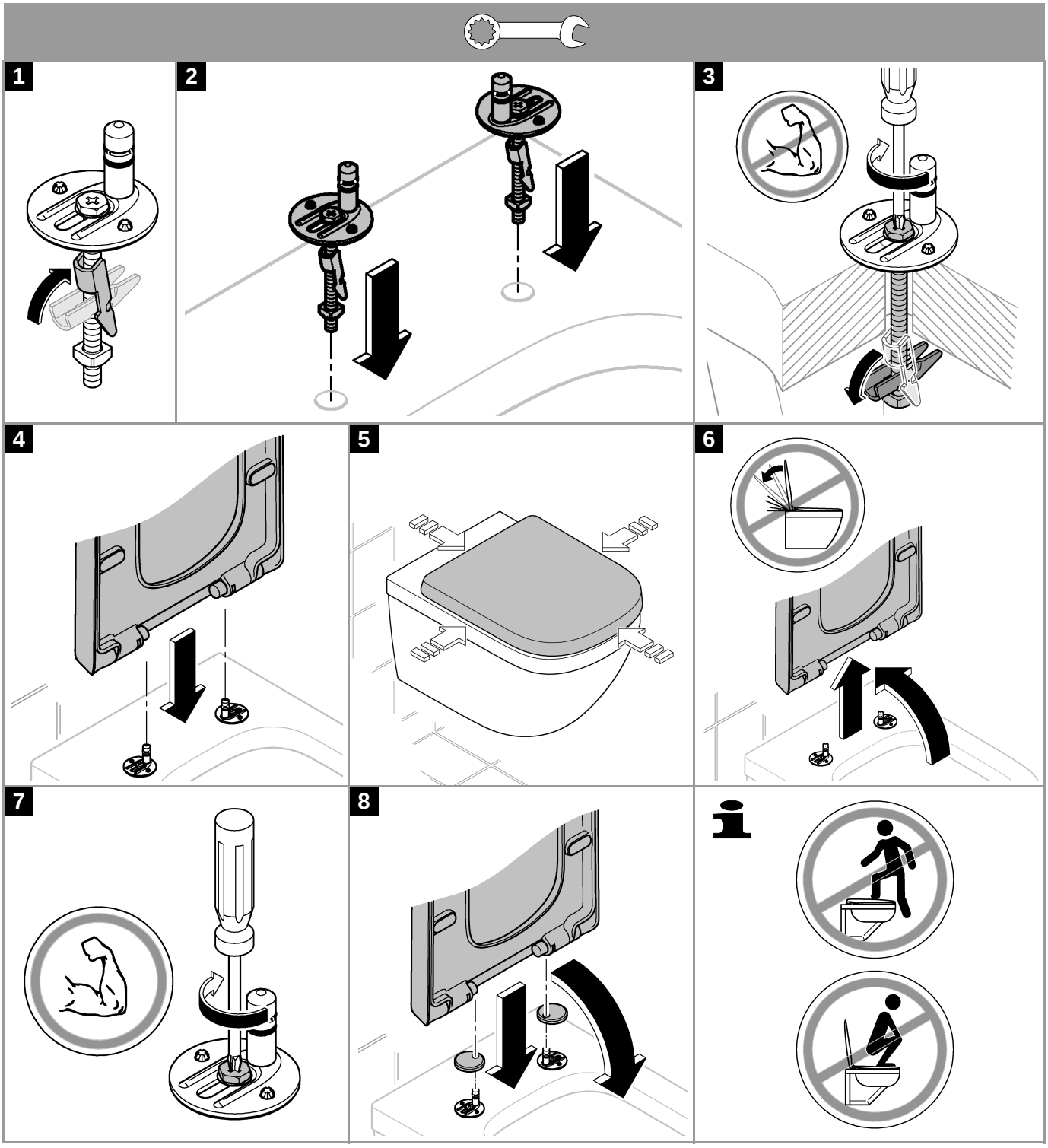

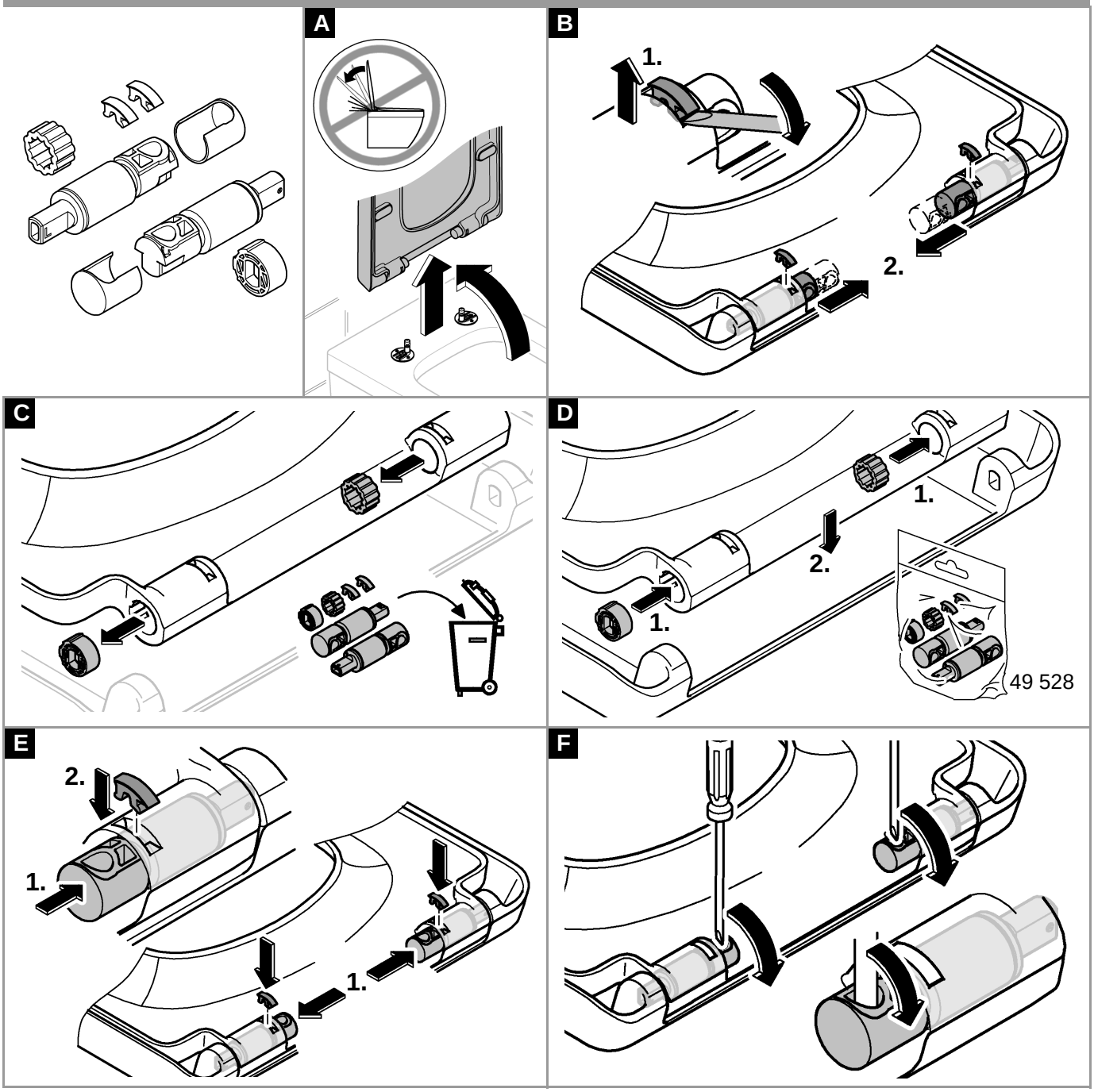
A
B
1.
2.
C
D
1.
2.
1.
49 528
E
2.
1.
1.
F

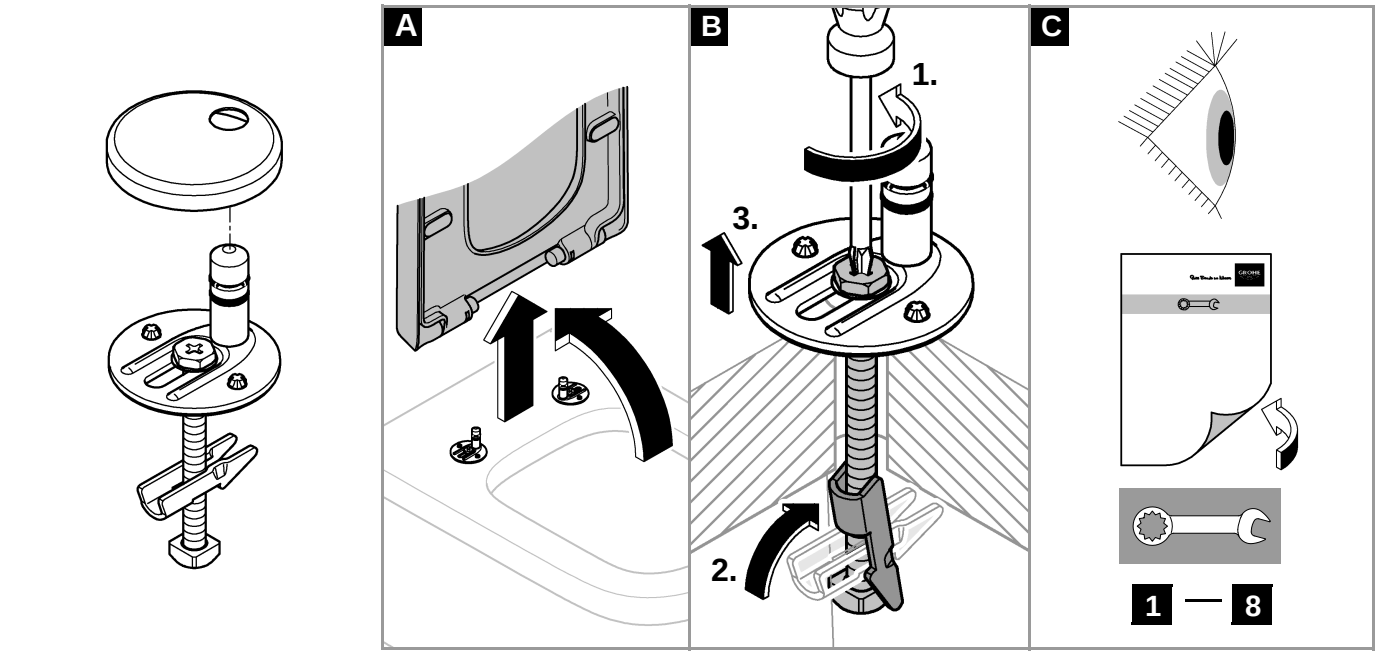
A
B
1.
3.
2.
C
1
8