GROHE

ENJOY WATER®

18 257

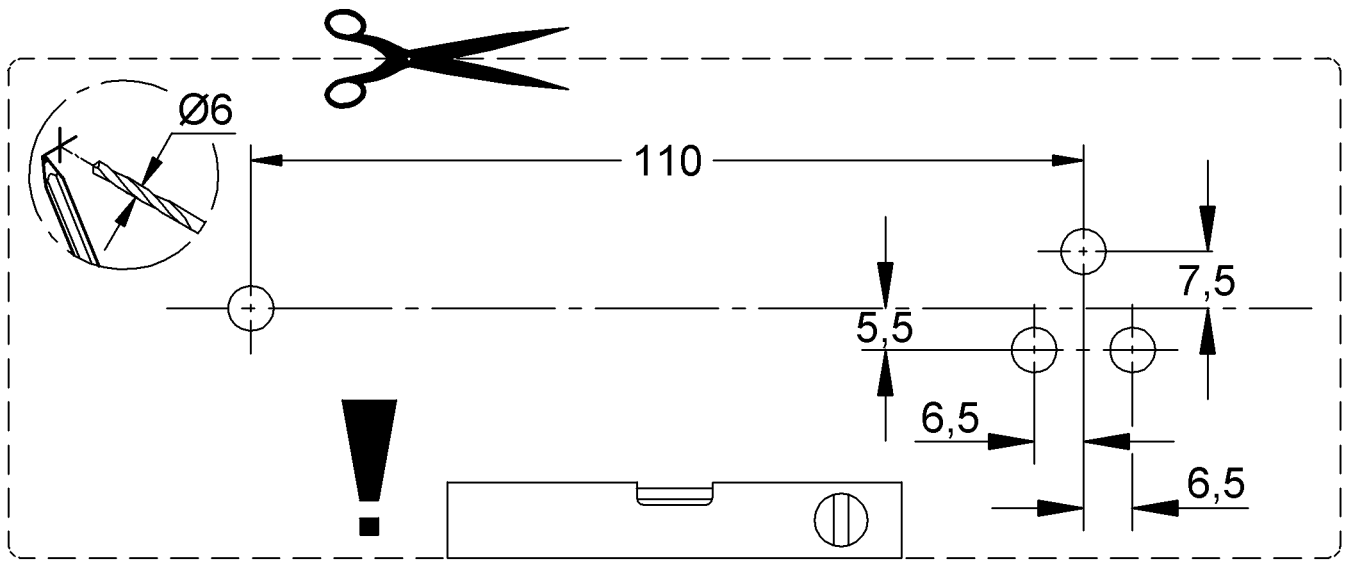

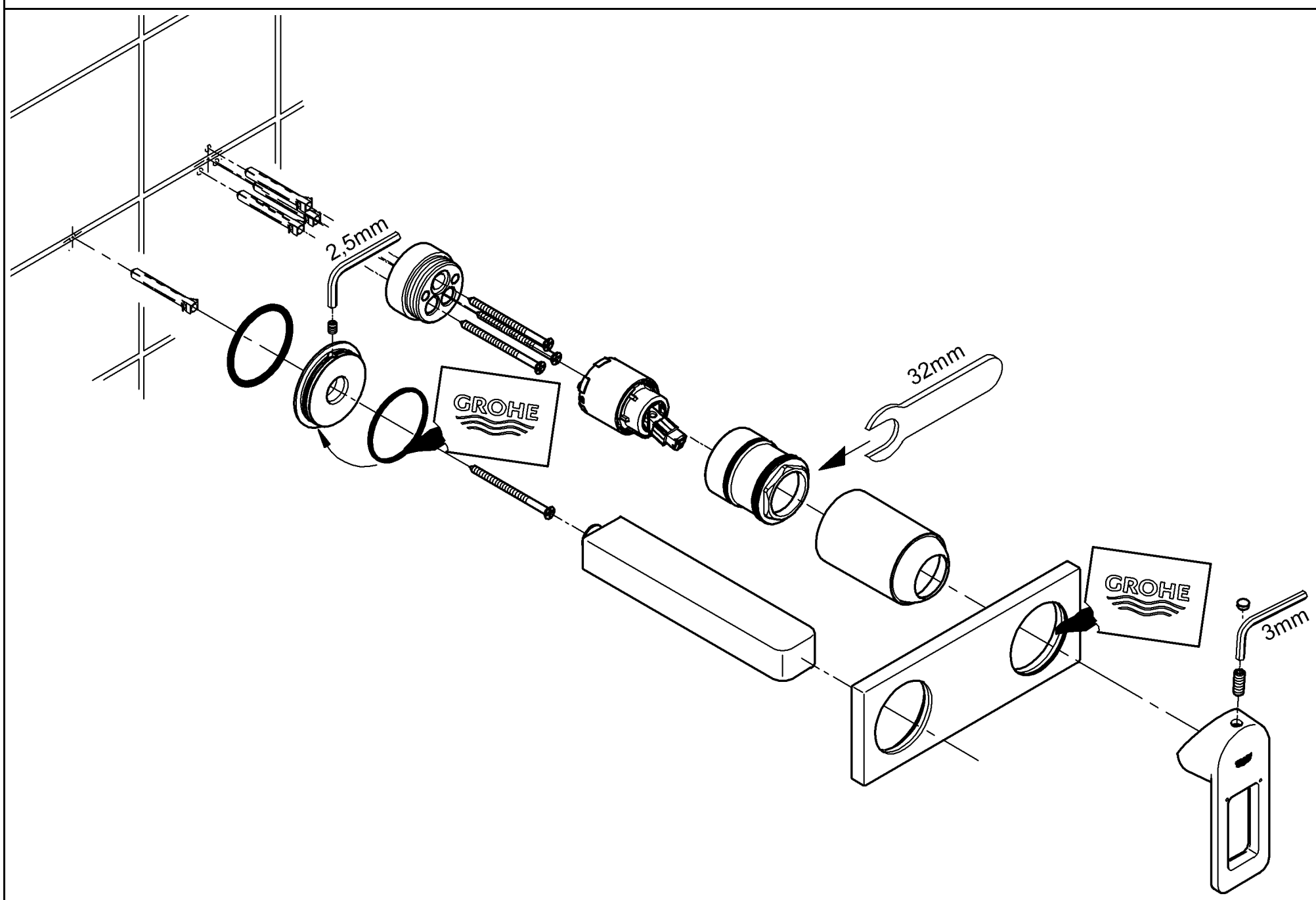

96.629.031/ÄM 213195/07.08